

BSK ZEPHYR MINI

DECENTRALIZED VENTILATION WITH HEAT RECOVERY

www.bskhvac.com.tr

BSK ZEPHYR MINI DECENTRALIZED VENTILATION WITH HEAT RECOVERY

Proper ventilation is crucial for preventing indoor air pollution and maintaining a healthy living environment. Without it, homes can trap moisture, pollutants, and stale air, leading to health issues and structural damage. The BSK Zephyr Mini is a heat recovery device specifically designed for bathrooms, kitchens, and dressing rooms without a central ventilation system. The main focus is energy efficiency; it minimizes heat loss commonly seen in traditional ventilation systems by recovering heat during the ventilation process. This makes the Zephyr Mini an ideal solution for maintaining both proper ventilation and energy conservation in smaller spaces.



How It Works

The BSK Zephyr Mini maintains a stable indoor temperature, operating in cycles regardless of external conditions. It features a ceramic heat recuperator and a two-way fan that alternates every 70 seconds between expelling stale indoor air and drawing in fresh outdoor air. The ceramic core captures heat from the outgoing air, and the fresh air is either heated or cooled depending on the season. With a heat exchange efficiency of up to 90%, the BSK Zephyr Mini ensures effective energy recovery and year-round comfort.

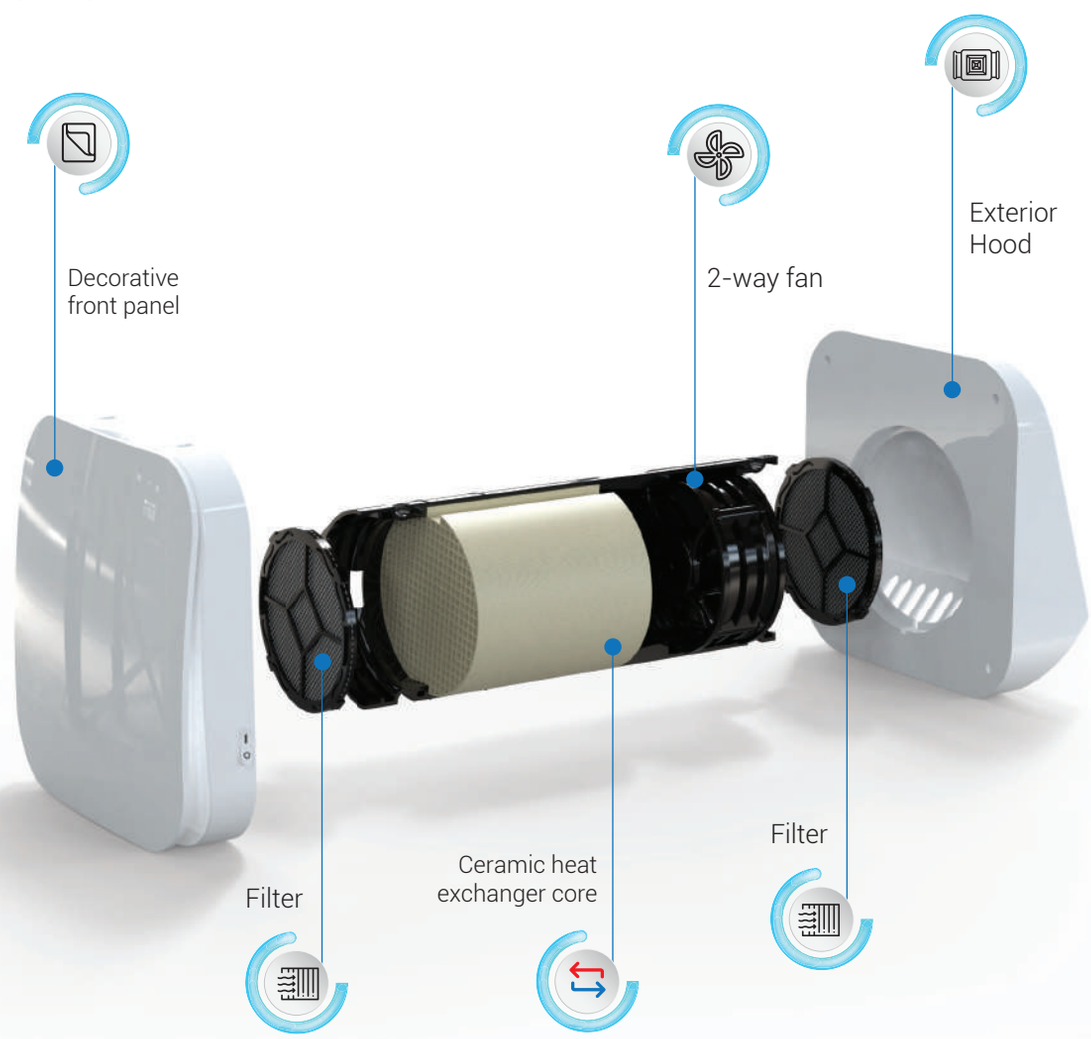

PRODUCT SPECIFICATION

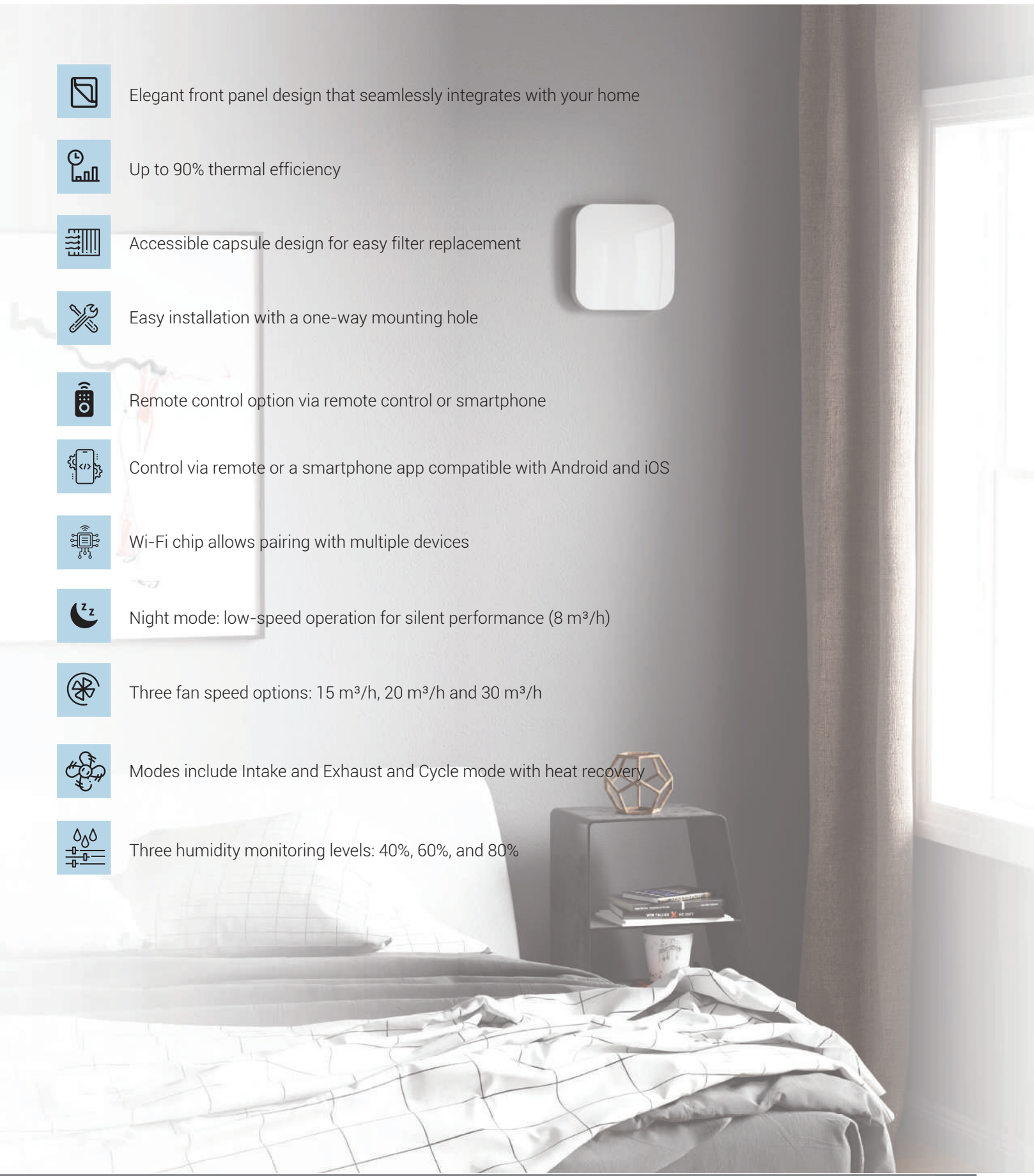

- Elegant front panel design that seamlessly integrates with your home
- Up to 90% thermal efficiency
- Accessible capsule design for easy filter replacement
- Easy installation with a one-way mounting hole
- Remote control option via remote control or smartphone
- Control via remote or a smartphone app compatible with Android and iOS
- Wi-Fi chip allows pairing with multiple devices
- Night mode: low-speed operation for silent performance (8 m^3/h)
- Three fan speed options: 15 m^3/h, 20 m^3/h and 30 m^3/h
- Modes include Intake and Exhaust and Cycle mode with heat recovery
- Three humidity monitoring levels: 40%, 60%, and 80%

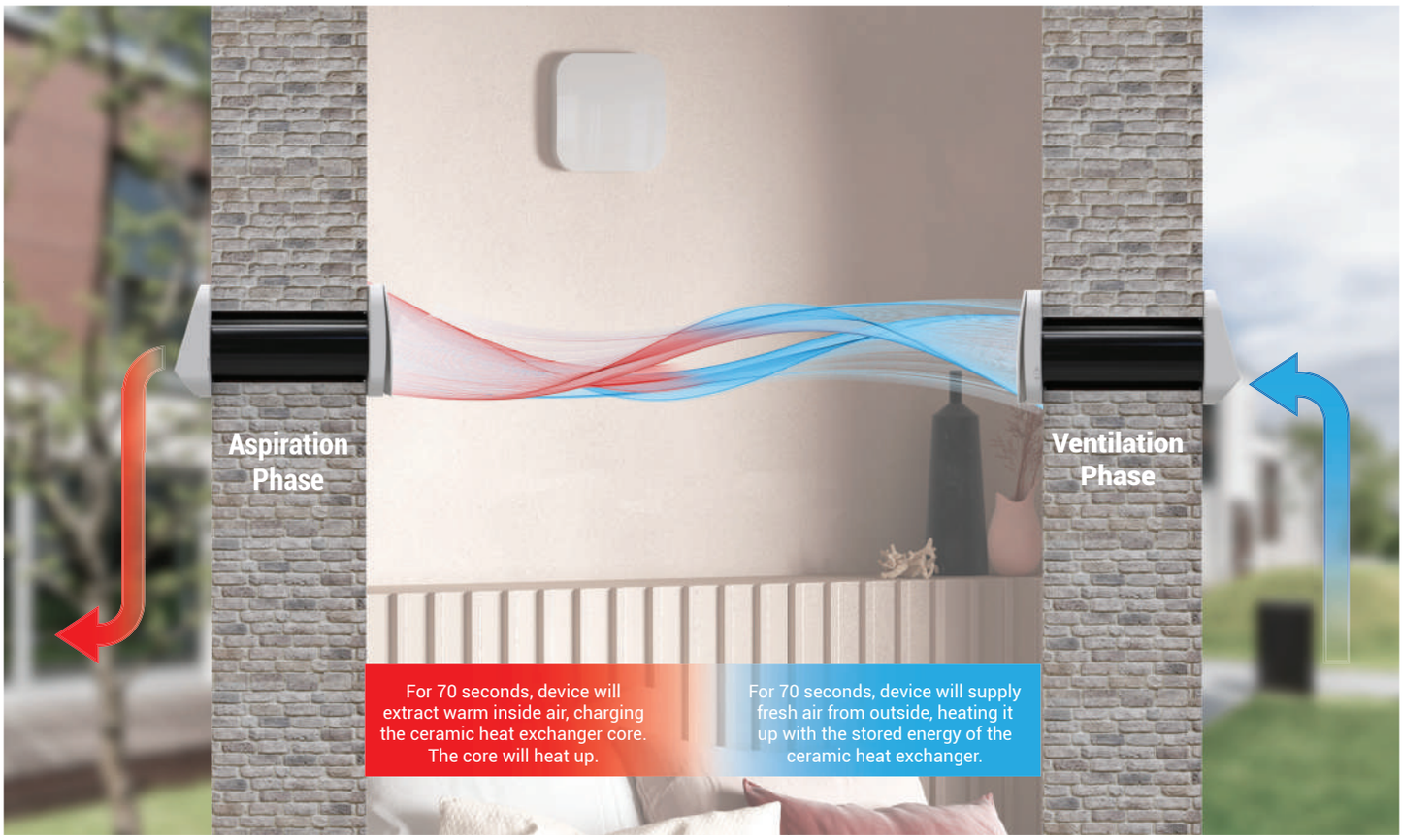



BSK Zephyr products allow multiple devices to be wirelessly paired by connecting to a single network. The devices can operate in parallel or reverse modes based on your preferences. When the main device operates in ventilation mode, all parallel devices will follow suit, and the reverse devices will switch to exhaust mode. This ensures continuous ventilation and airflow, creating air drafts within or between rooms to enhance the effectiveness of ventilation. You can set different ventilation modes and speeds for different rooms, allowing you to create various ventilation zones throughout your home.

TECHNICAL SPECIFICATION

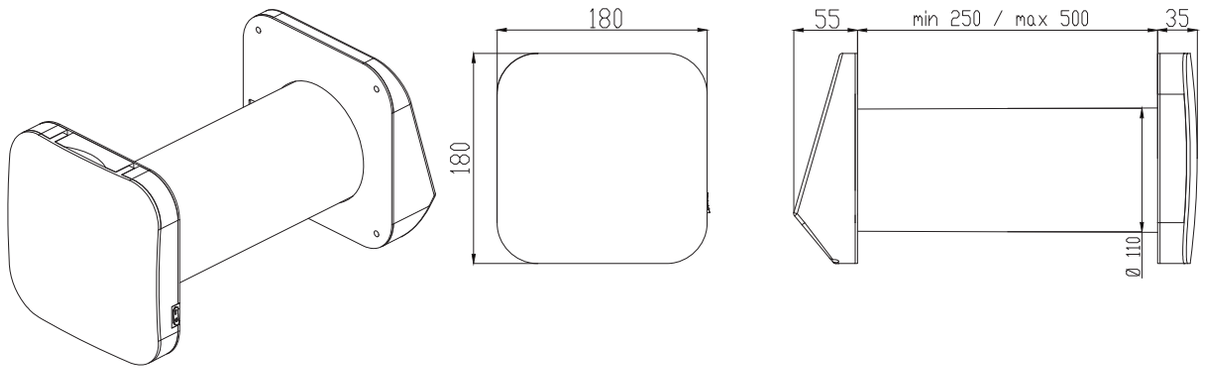

	Technical Specifications			
Electrical Connection	110/230V 50/60Hz			
Fan Speed	Night Mode	I	II	III
Air Flow (m^3/h)	8	15	20	30
Elec. Power (W)	1.4	1.7	2	3.1
Thermal Efficiency	up to 90%			
Fan Type	2-way EC Controlled 12VDC Axial Fan			
Sensor Type	Temperature and Humidity			
Filter	2x G3 (optional M5)			
Protection Class	IPX4			
Operating Temp.	-25 / +40 °C			

IR REMOTE CONTROL



- Switch the unit on/off
- Night mode for completely silent operation
- Three different ventilation modes: Input and Exhaust for continuous ventilation or air extraction, and Cycle mode for default operation with heat recovery
- Four adjustable fan speeds, including night mode
- There are three humidity monitoring levels; when the set humidity level is exceeded, the automatic exhaust mode removes excess humidity

LOCAL WIRELESS PAIRING OF MULTIPLE UNITS

Wi Fi™ READY

Wirelessly connect and control multiple BSK Zephyr units through local pairing using the onboard wireless chip. This feature facilitates seamless communication between devices throughout your home. By pairing individual units to a master device, you can establish ventilation zones, ensuring synchronized operation. Plus, manage all connected devices conveniently with a single IR remote. This local connection between devices operates independently of the internet, ensuring reliable functionality without the need for internet access.

BSK CONNECT MOBILE APP

You can easily control all your BSK devices with the BSK Connect mobile app and unlock the full potential of your BSK Zephyr units. Whether you're at home or on the go, effortlessly manage your indoor ventilation and enjoy enhanced comfort anytime, anywhere.

Remote Access:	Adjust settings and monitor performance from anywhere with internet access.
Customized Settings:	Easily manage fan speed, boost settings or humidity levels preferences.
Weekly Scheduling:	Set up weekly schedules for personalized comfort and energy efficiency.
Real-Time Monitoring:	Stay informed with instant updates on indoor temperature and humidity conditions.
Filter Maintenance Alerts:	Receive timely reminders for optimal device performance.

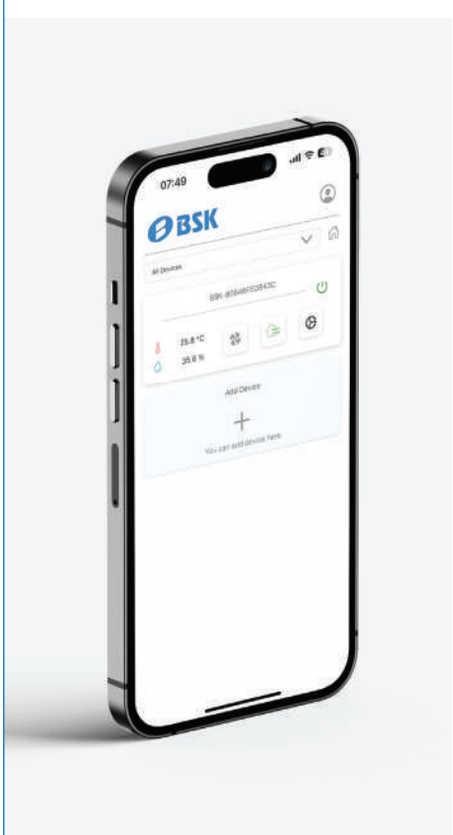

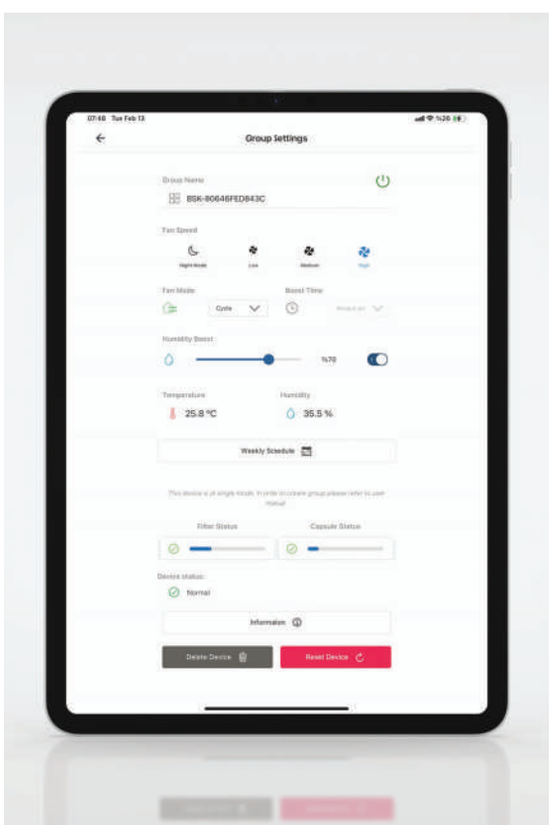

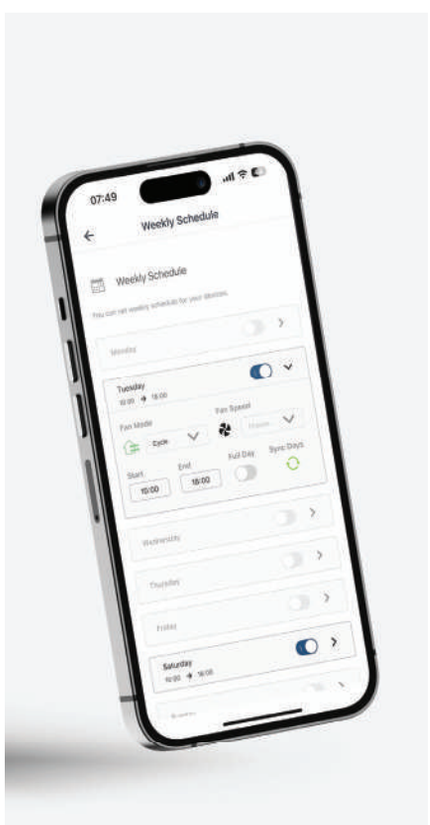

Download on the App Store

GET IT ON Google Play

DECORATIVE METAL EXTERIOR HOOD

Available in both stainless steel and galvanized options, this durable solution is perfect for enduring challenging outdoor conditions,with a variety of color choices to match your building facade

Zephyrmini/A/PSL





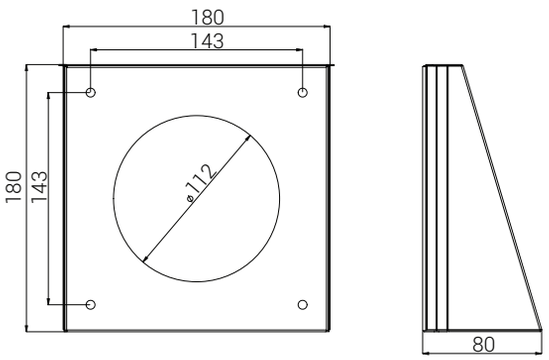

Zephyrmini/A/SSL





THE THIN WALL METAL EXTERIOR LOUVRE

The design extends the minimum wall thickness requirement of the Zephyr units to 150mm by accommodating a wider exterior hood. This allows the capsule to extend into the hood, providing greater flexibility in installations with limited wall thickness.

Zephyrmini/A/SNWL





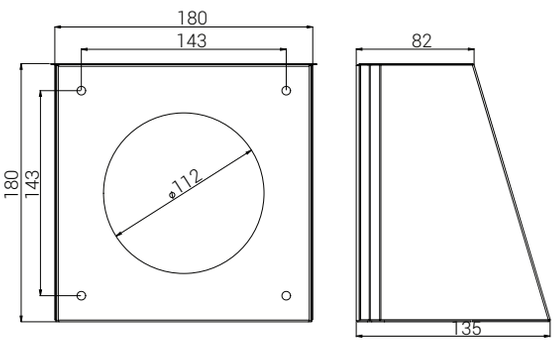



BSK Ventilation Equipment INC.

Mimar Sinan mah. Basra cad. No: 59 / A Sultanbeyli, İstanbul
+90 (216) 669 09 70
info@bskhavalandirma.com.tr

www.bskhvac.com.tr